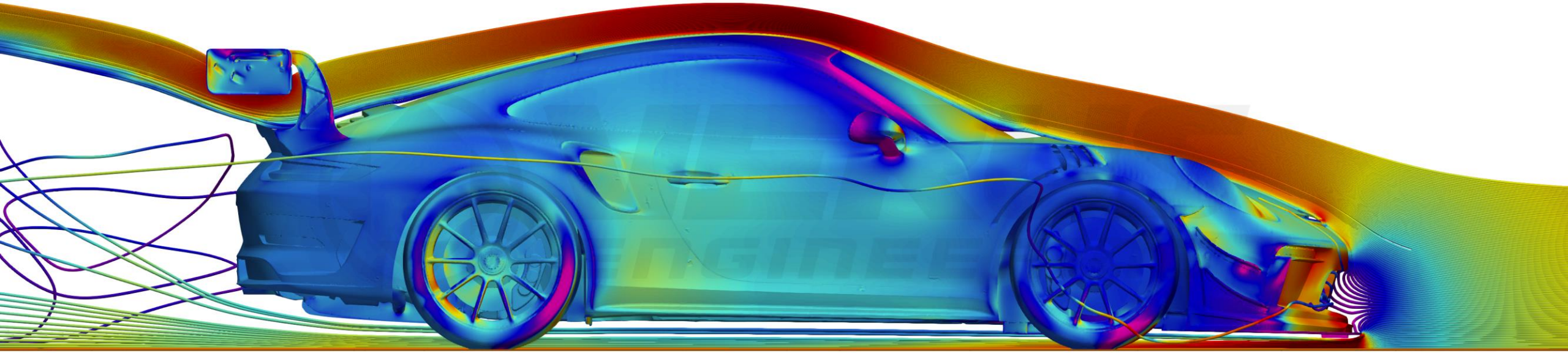

991 PORSCHE GT3 RS

PERFORMANCE OF VERUS ENGINEERING VENTUS PACKAGES

THE REPRODUCTION, DISTRIBUTION, AND UTILIZATION OF THIS REPORT WITHOUT EXPRESS WRITTEN AUTHORIZATION BY VERUS ENGINEERING IS PROHIBITED

SUMMARY : AERODYNAMIC FORCES

- Aerodynamic forces change with the square of the vehicle speed, which is why we use a graph.
- The Ventus 2, and 3 packages increases downforce over stock substantially.
- When developing an aerodynamic package, Verus Engineering focuses on maximizing efficiency.
- Efficient downforce decreases lap times and improves vehicle performance.
- AOA adjustment, shown on a later slide, allows the driver to fine tune aerodynamic balance to his or her preference.
- The Ventus kit is designed and tested to make your 991 GT3RS faster around the track.

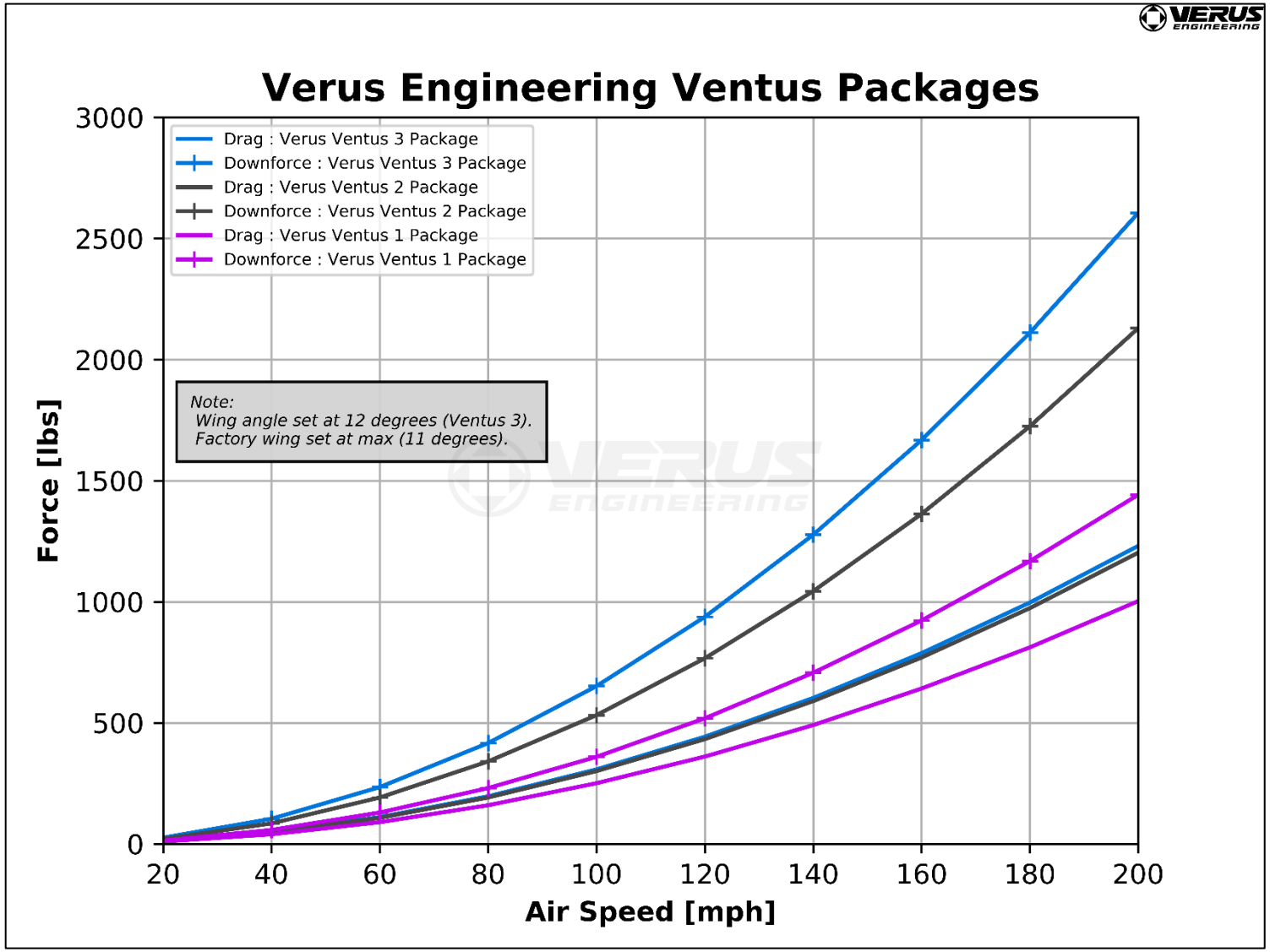

THE REPRODUCTION, DISTRIBUTION, AND UTILIZATION OF THIS REPORT WITHOUT EXPRESS WRITTEN AUTHORIZATION BY VERUS ENGINEERING IS PROHIBITED

VENTUS 1 PACKAGE

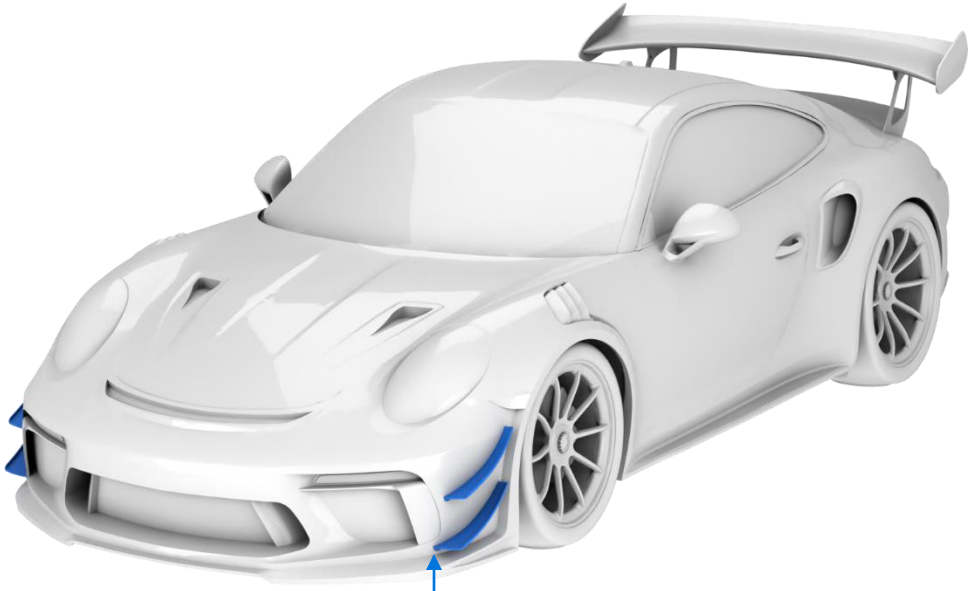

DUAL DIVE PLANES

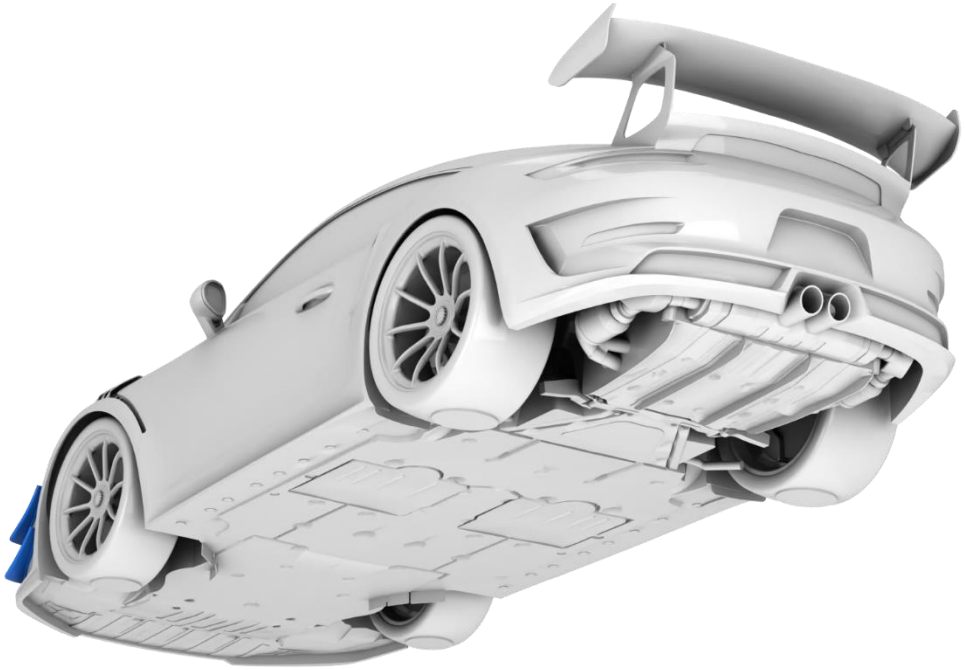

THE REPRODUCTION, DISTRIBUTION, AND UTILIZATION OF THIS REPORT WITHOUT EXPRESS WRITTEN AUTHORIZATION BY VERUS ENGINEERING IS PROHIBITED

VENTUS 2 PACKAGE

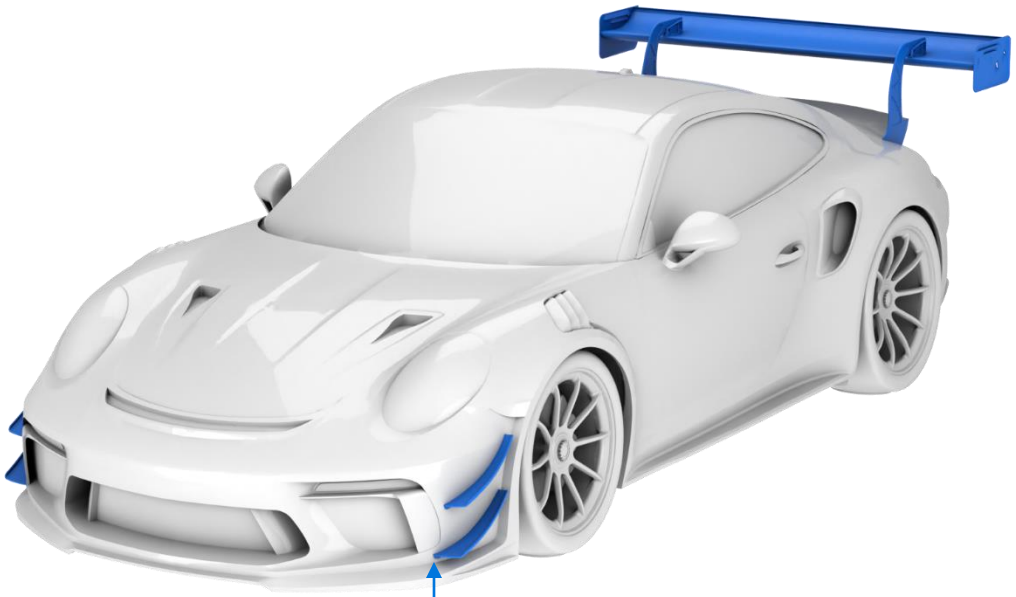

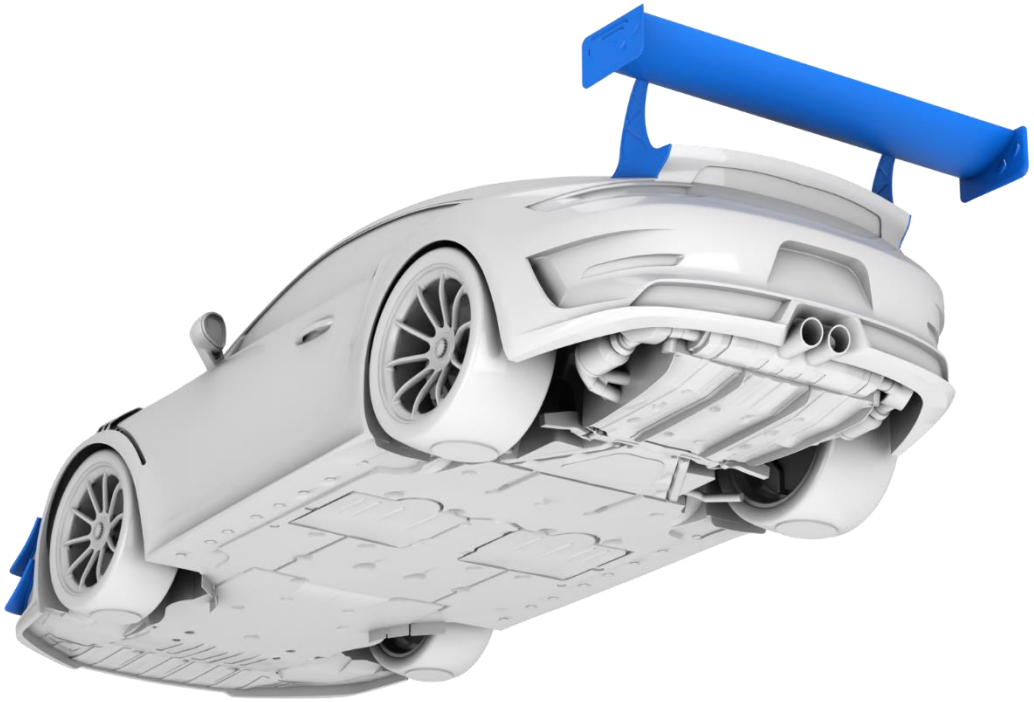

DUAL DIVE PLANES

V1X REAR WING

THE REPRODUCTION, DISTRIBUTION, AND UTILIZATION OF THIS REPORT WITHOUT EXPRESS WRITTEN AUTHORIZATION BY VERUS ENGINEERING IS PROHIBITED

VENTUS 3 PACKAGE

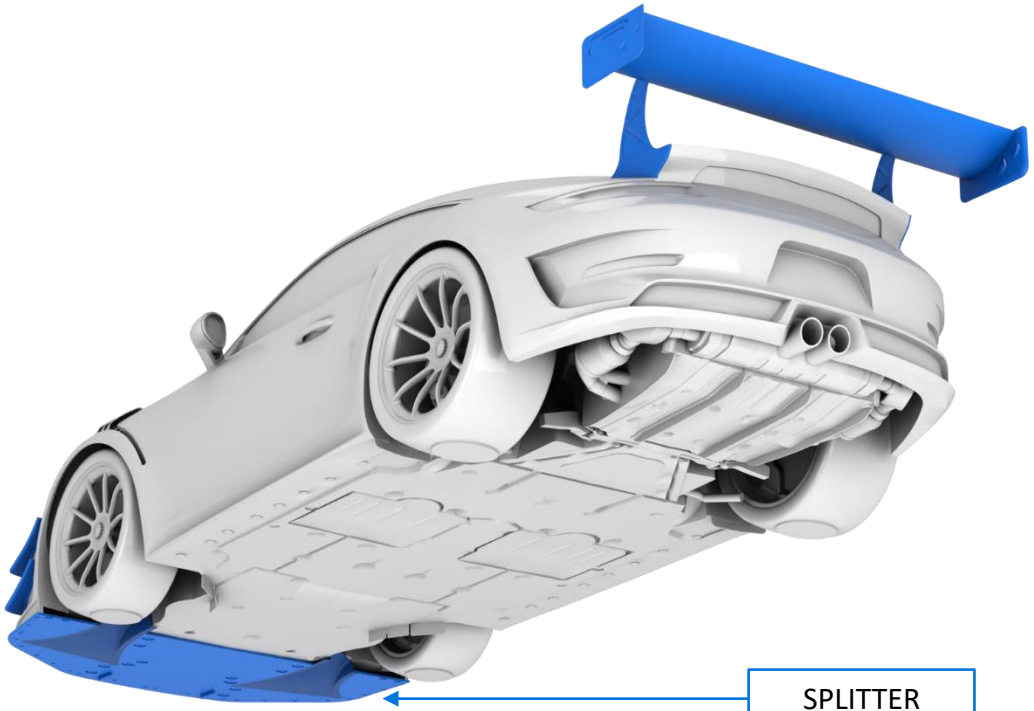

DUAL DIVE PLANES

V1X REAR WING

THE REPRODUCTION, DISTRIBUTION, AND UTILIZATION OF THIS REPORT WITHOUT EXPRESS WRITTEN AUTHORIZATION BY VERUS ENGINEERING IS PROHIBITED

VENTUS 3-1 PACKAGE

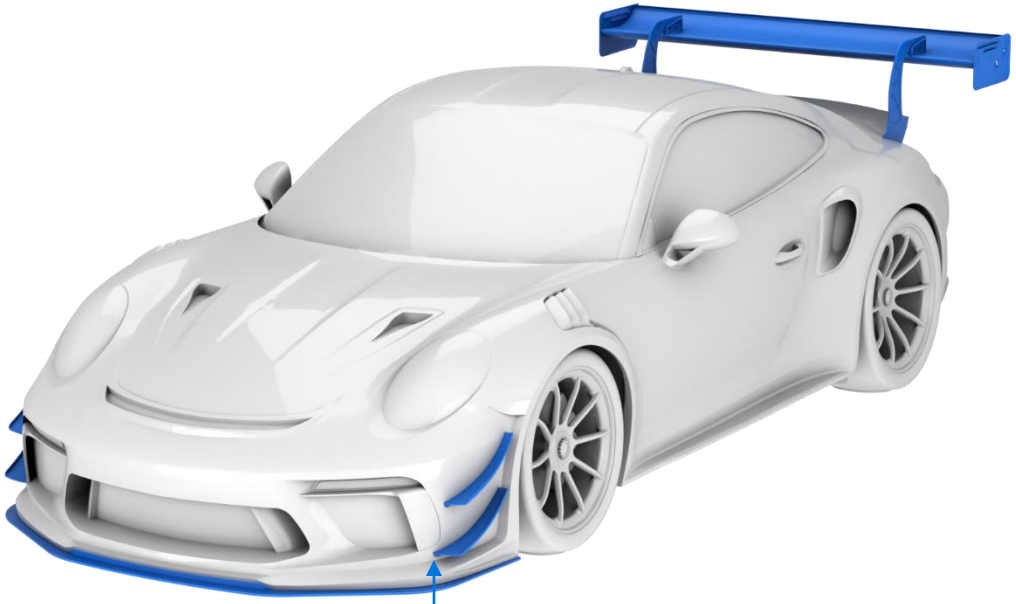

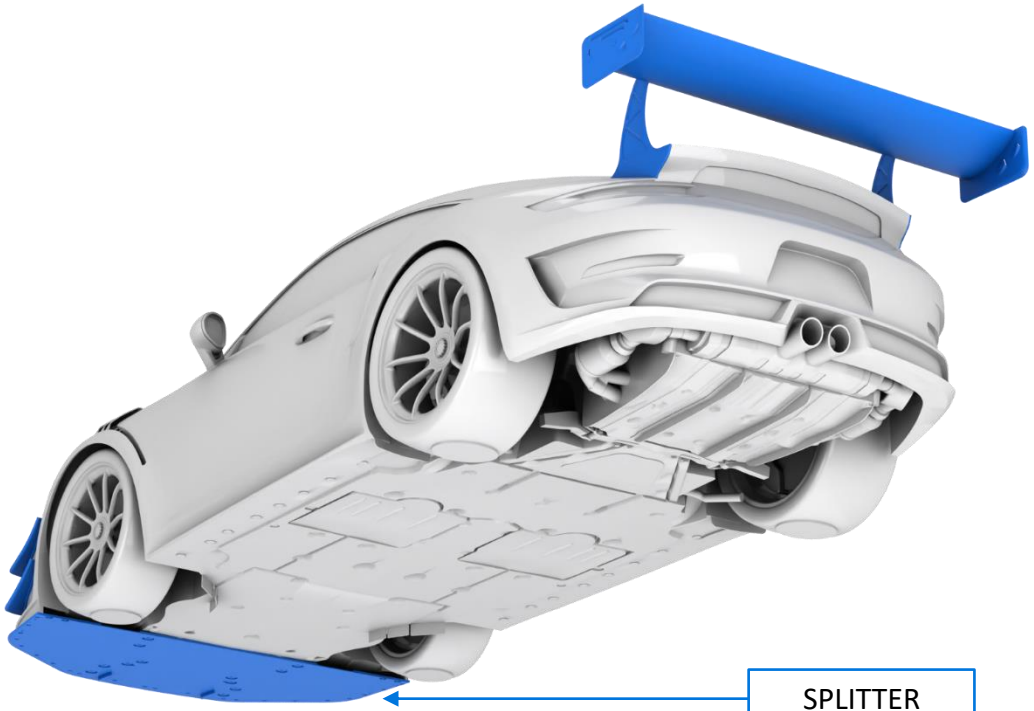

DUAL DIVE PLANES

V1X REAR WING

THE REPRODUCTION, DISTRIBUTION, AND UTILIZATION OF THIS REPORT WITHOUT EXPRESS WRITTEN AUTHORIZATION BY VERUS ENGINEERING IS PROHIBITED

DIVE PLANES / CANARDS

- Dive planes are great for customers looking for a slight bump in front downforce and no reduction in ground clearance.
- Verus Engineering develops dive planes to produce downforce by controlling the flow around the vehicle, not on the units themselves, improving efficacy.
- A small amount of downforce is produced on the units themselves, high pressure on top, low pressure on bottom.
- We develop the dive planes to create a beneficial vortex which helps evacuate the fenders.
- This evacuation reduces lift on the body, improving performance.
- The dive planes are produced from 2x2 twill carbon fiber finished in an automotive clear coat. Templates are supplied to ensure location of the units are correct.

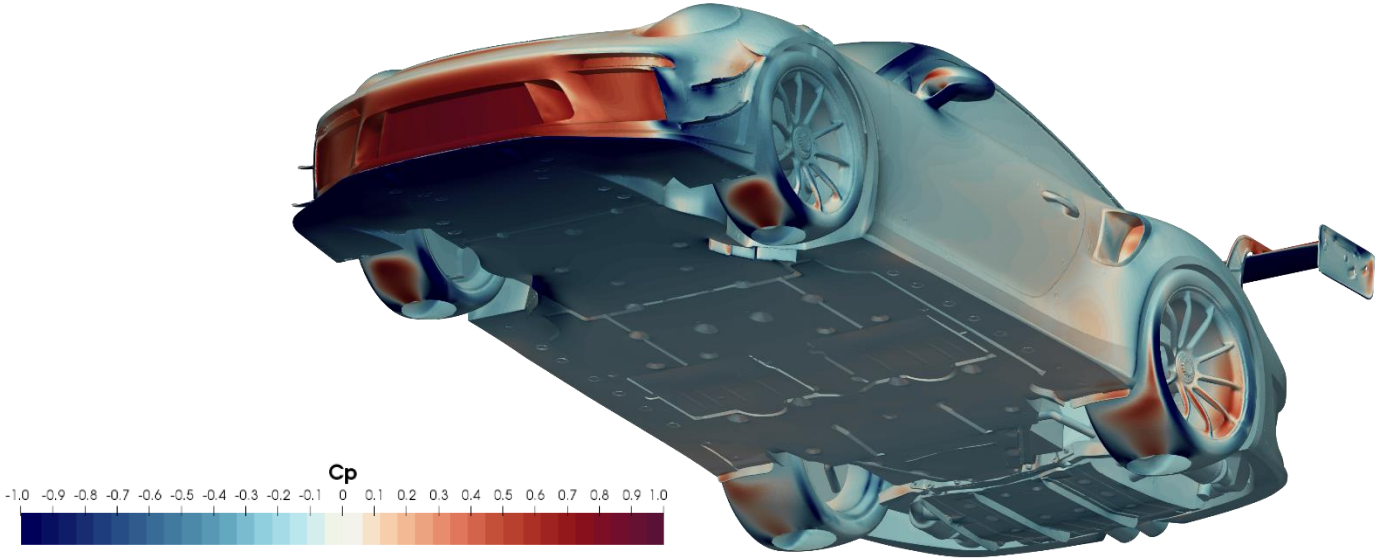

THE REPRODUCTION, DISTRIBUTION, AND UTILIZATION OF THIS REPORT WITHOUT EXPRESS WRITTEN AUTHORIZATION BY VERUS ENGINEERING IS PROHIBITED

V1X REAR WING

- The rear wing is great for customers looking for a large bump in rear downforce.
- The UCW wing profile was developed in CFD and refined in the wind tunnel.
- The airfoil produces efficient downforce on the 991 GT3 RS.
- The bottom surface is where the majority of the downforce is generated. This low pressure pulls the car downward (#1)
- The top surface still produces downforce, but not like the bottom surface (#2)
- The Cp (coefficient of pressure) does not go above 0.7 on the top, but the bottom goes below -1.
- The wing bolts on like stock and is produced from 2x2 twill, pre-preg carbon fiber. It is adjustable from 0 to 15 degrees AOA.

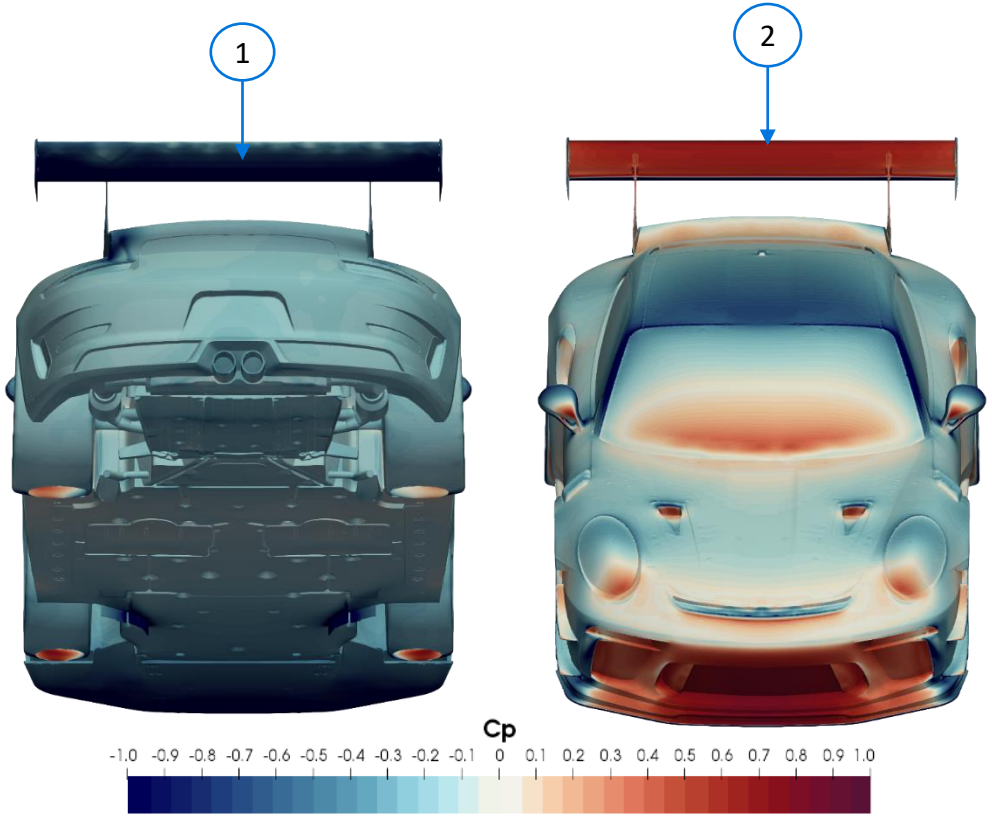

THE REPRODUCTION, DISTRIBUTION, AND UTILIZATION OF THIS REPORT WITHOUT EXPRESS WRITTEN AUTHORIZATION BY VERUS ENGINEERING IS PROHIBITED

REAR WING UPRIGHT DETAIL

- The uprights for the Porsche 991 GT3 RS were optimized using FEA for weight and strength.
- The shape was first optimized for aerodynamics with the leading edge radius and the trailing edge knife-edged.
- The pockets decrease weight while keeping the upright strong enough to handle the loads from the V1X. The pockets do not hurt the aerodynamics.

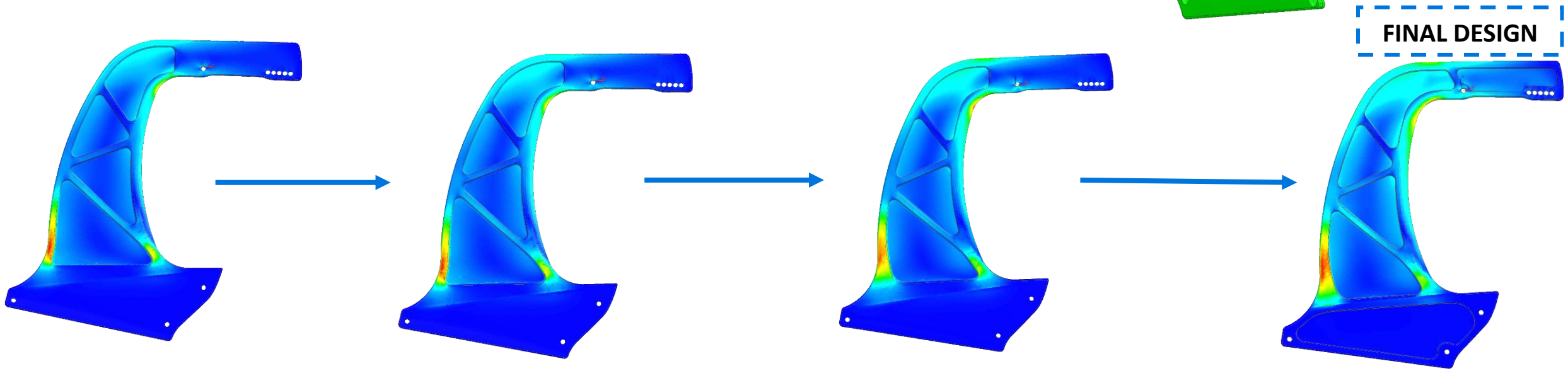

THE REPRODUCTION, DISTRIBUTION, AND UTILIZATION OF THIS REPORT WITHOUT EXPRESS WRITTEN AUTHORIZATION BY VERUS ENGINEERING IS PROHIBITED

SPLITTER DETAILS

The Verus Engineering Front Splitter is ideal for increasing front-end downforce. The front splitter makes significant front downforce since it is using ground effects. The splitter comes with 2-options; flat panel or front diffusers. The flat panel is for the stock wing and the front diffusers is when the Verus Engineering Wing is applied to the GT3 RS. The full splitter assembly is simulated. The full splitter assembly has an efficiency [L/D] of 46 with the covers and 26 with front diffusers. Splitters are a very efficient downforce creating component for vehicles.

1. Peak low pressure region on splitter

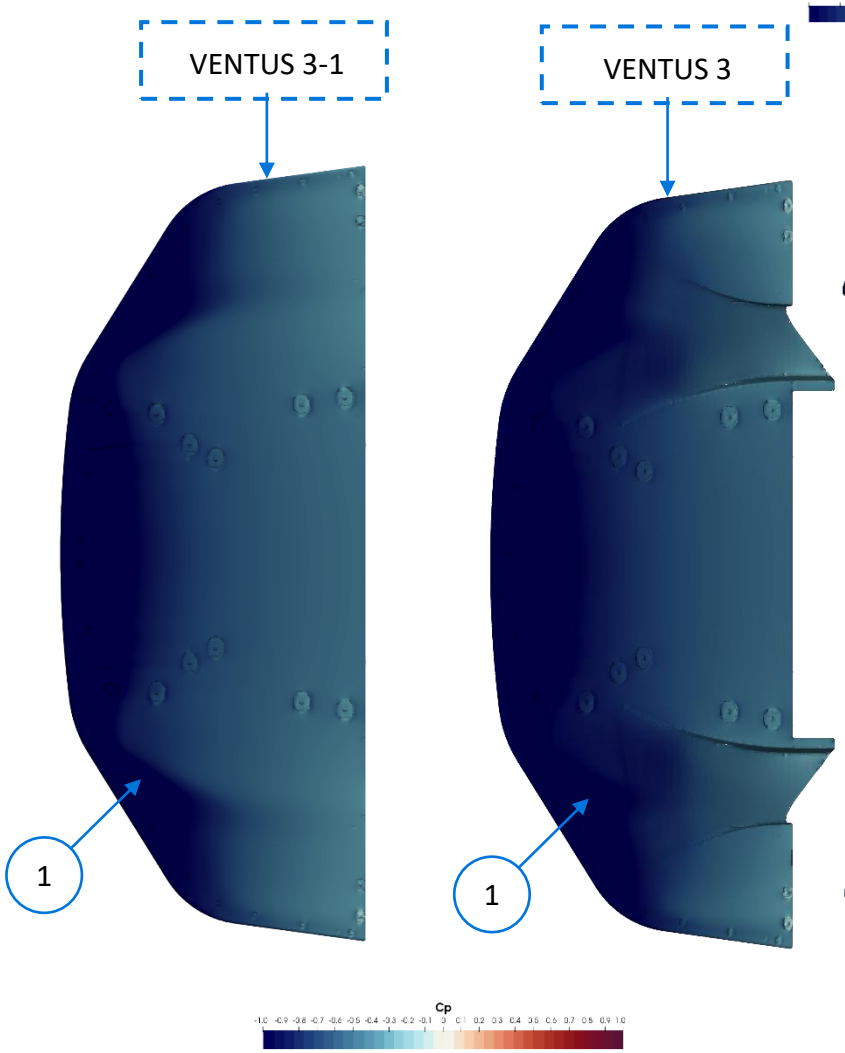

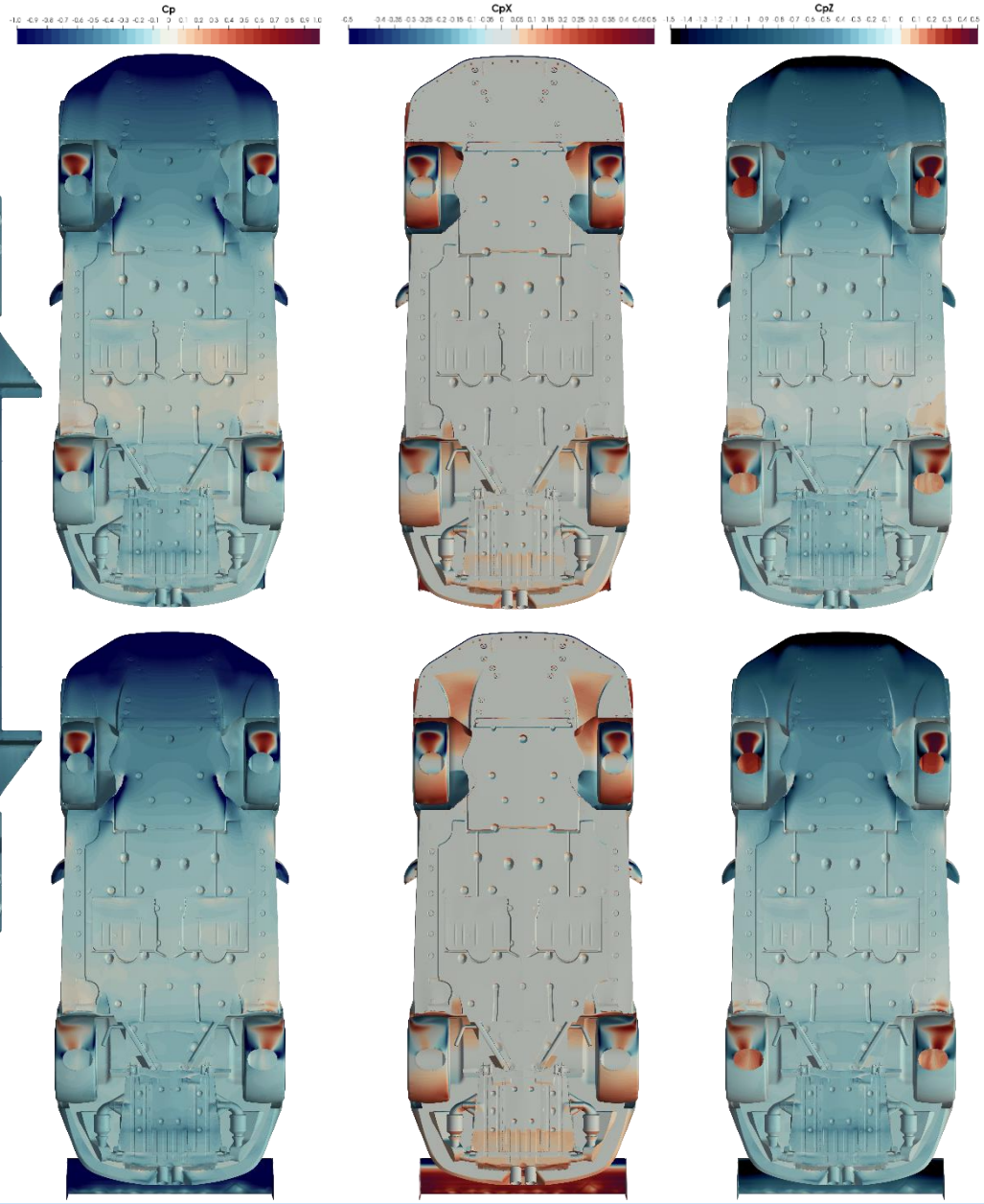

THE REPRODUCTION, DISTRIBUTION, AND UTILIZATION OF THIS REPORT WITHOUT EXPRESS WRITTEN AUTHORIZATION BY VERUS ENGINEERING IS PROHIBITED

SPLITTER DETAILS

1. The front diffuser increases downforce significantly and allows more angle of attack on the wing to produce more downforce. The diffusers work by increasing the low pressure area on the front splitter.

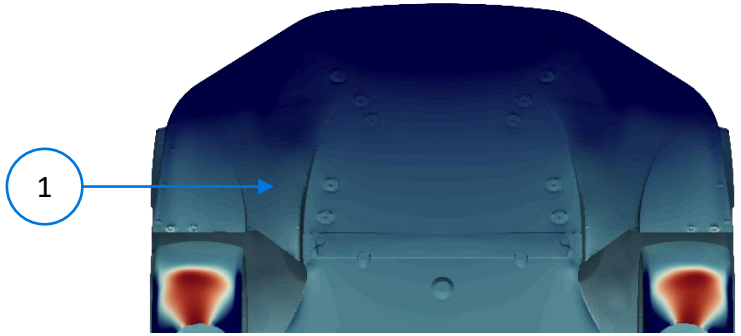

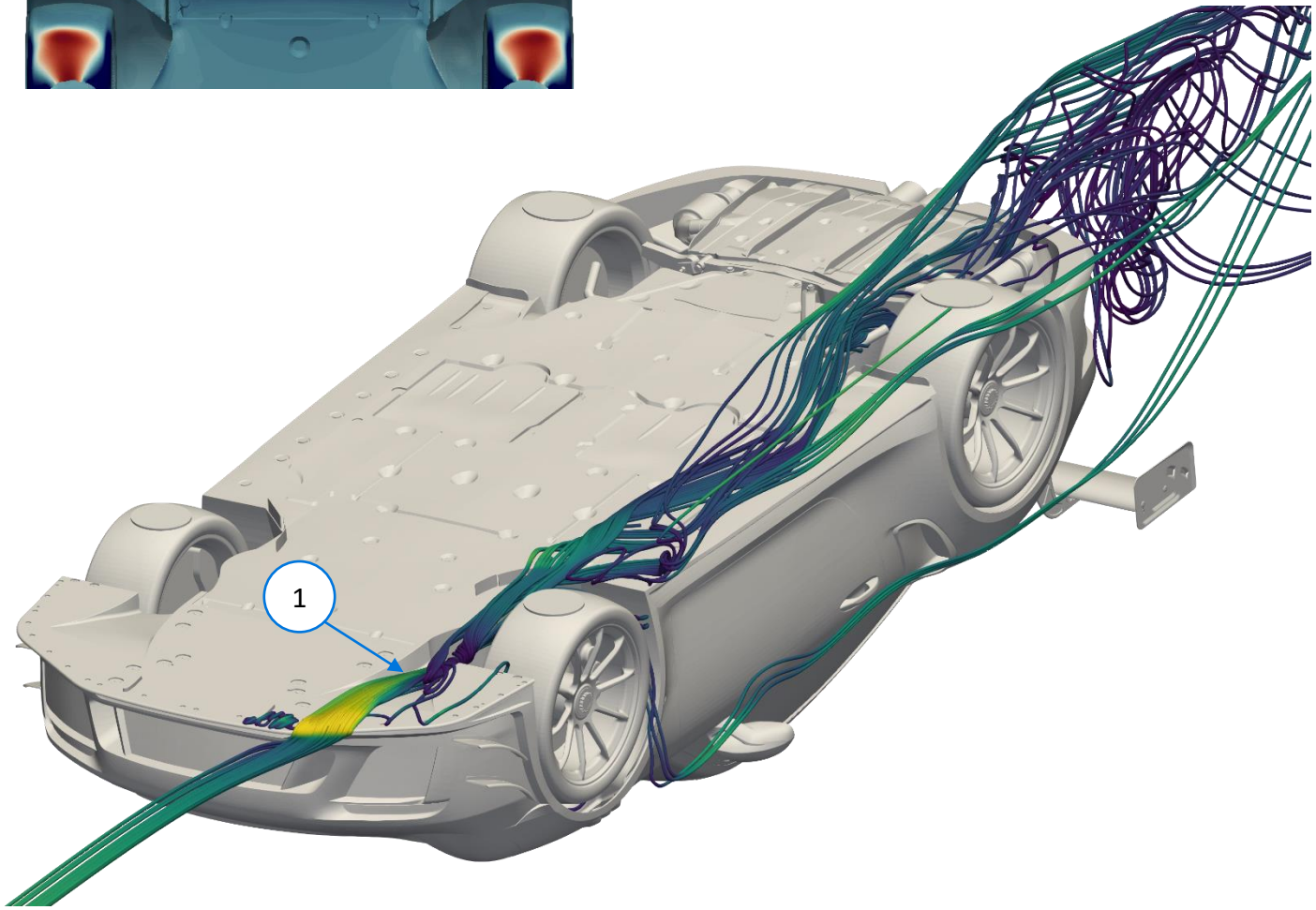

THE REPRODUCTION, DISTRIBUTION, AND UTILIZATION OF THIS REPORT WITHOUT EXPRESS WRITTEN AUTHORIZATION BY VERUS ENGINEERING IS PROHIBITED

SUMMARY : REAR WING FORCES

The V1X might need to be adjusted to fine tune the balance for driver preference.

The V1X was developed in CFD and optimized using adjoint and optimization methods. The wing makes outstanding downforce while keeping efficiency high. The V1X also was engineered to have a trailing edge stall or slow stall. More adjustment and tuning is available with this type of stall.

Confidence in our numbers is key. Testing in the wind tunnel for correlation was key to this confidence.

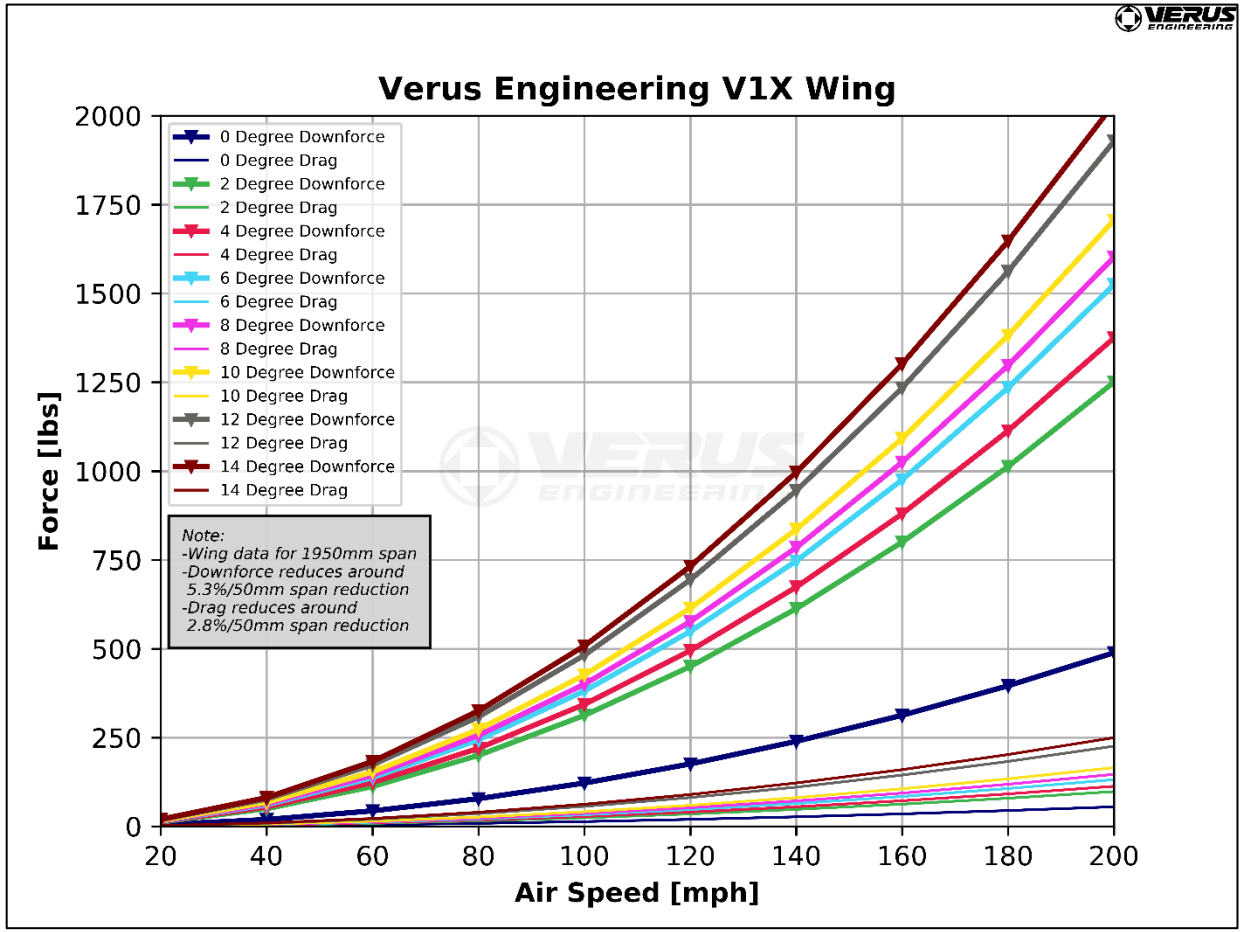

V1X is 300mm Chord

THE REPRODUCTION, DISTRIBUTION, AND UTILIZATION OF THIS REPORT WITHOUT EXPRESS WRITTEN AUTHORIZATION BY VERUS ENGINEERING IS PROHIBITED

SUMMARY

The Verus Engineering Ventus Packages for the 991 Porsche GT3 RS are designed to decrease lap times utilizing well developed and functional aerodynamic components. These packages are designed to fit like an OEM component and increase the factory performance **all while keeping the factory warranty.** The research and development of the package was done using cutting edge technology in CFD and proven designs from previous work.

The individual components do not need to be installed as a package, but that will give the best performance and likelihood for decreasing track times in a safe and predictable way.

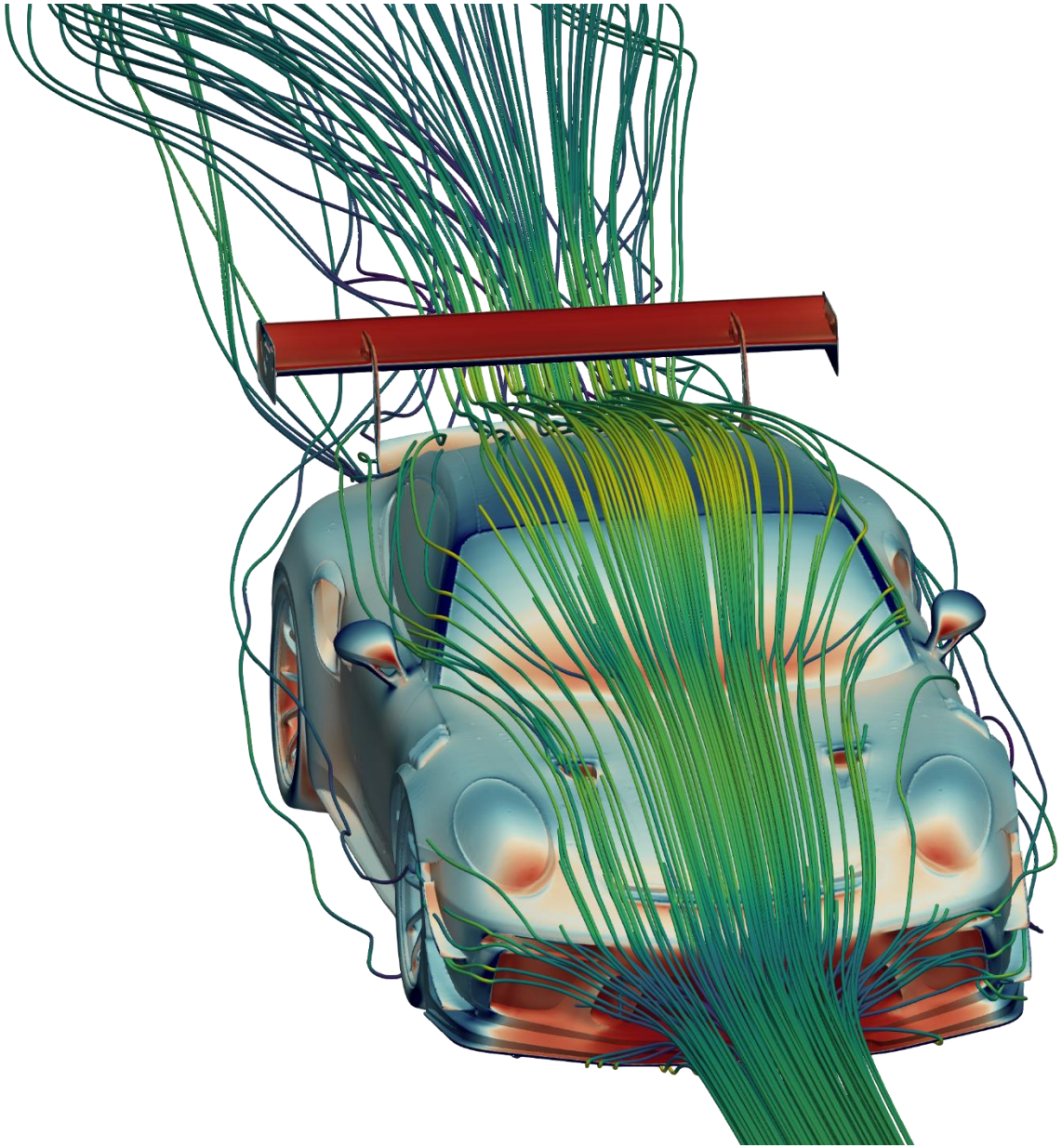

THE REPRODUCTION, DISTRIBUTION, AND UTILIZATION OF THIS REPORT WITHOUT EXPRESS WRITTEN AUTHORIZATION BY VERUS ENGINEERING IS PROHIBITED

QUALITY OF CAD MODEL

- The CAD model is a crucial aspect of accuracy.
- Bad inputs result in bad outputs.
- The CFD simulation is only as good as the geometry and setup of the CFD analysis.
- The image to the right shows the overlay of the CAD model (gray) and the scan (blue).
- The surfaces are less than 0.8mm off from the actual scan model in the “worst” locations, with most of the car being less than this.
- Through ducts and radiator ducting were modeled for improved analysis accuracy.

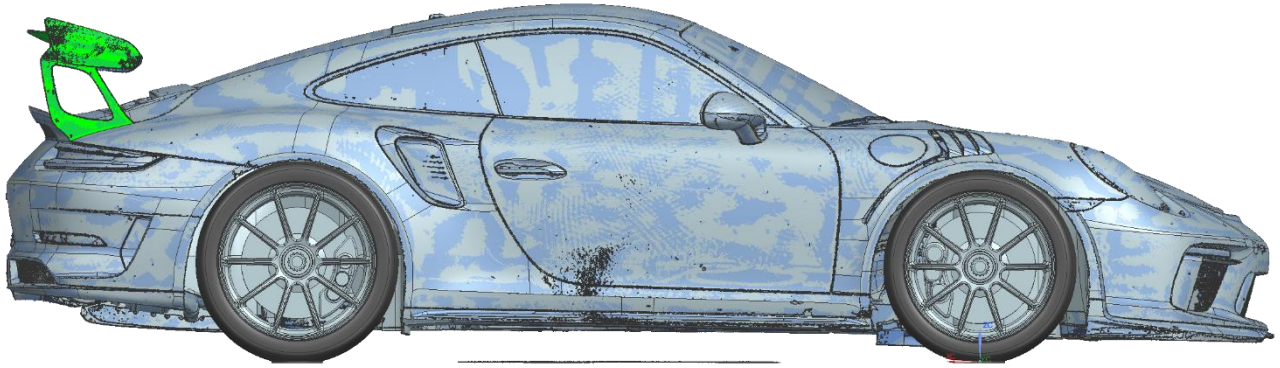

THE REPRODUCTION, DISTRIBUTION, AND UTILIZATION OF THIS REPORT WITHOUT EXPRESS WRITTEN AUTHORIZATION BY VERUS ENGINEERING IS PROHIBITED

THE SCIENCE

This analysis was done using OpenFOAM V6 which is a finite volume CFD software. The solver was SIMPLE and the turbulence model was K-Omega SST using standard wall conditions. We use standard automotive arrangement when setting up boundary conditions and running a full-car. The case was simulated using slight yawed airflow of 0.5 degrees. This yawed airflow is to ensure we are not analyzing a condition the car will almost never see which is perfectly straight airflow down the length of the car.

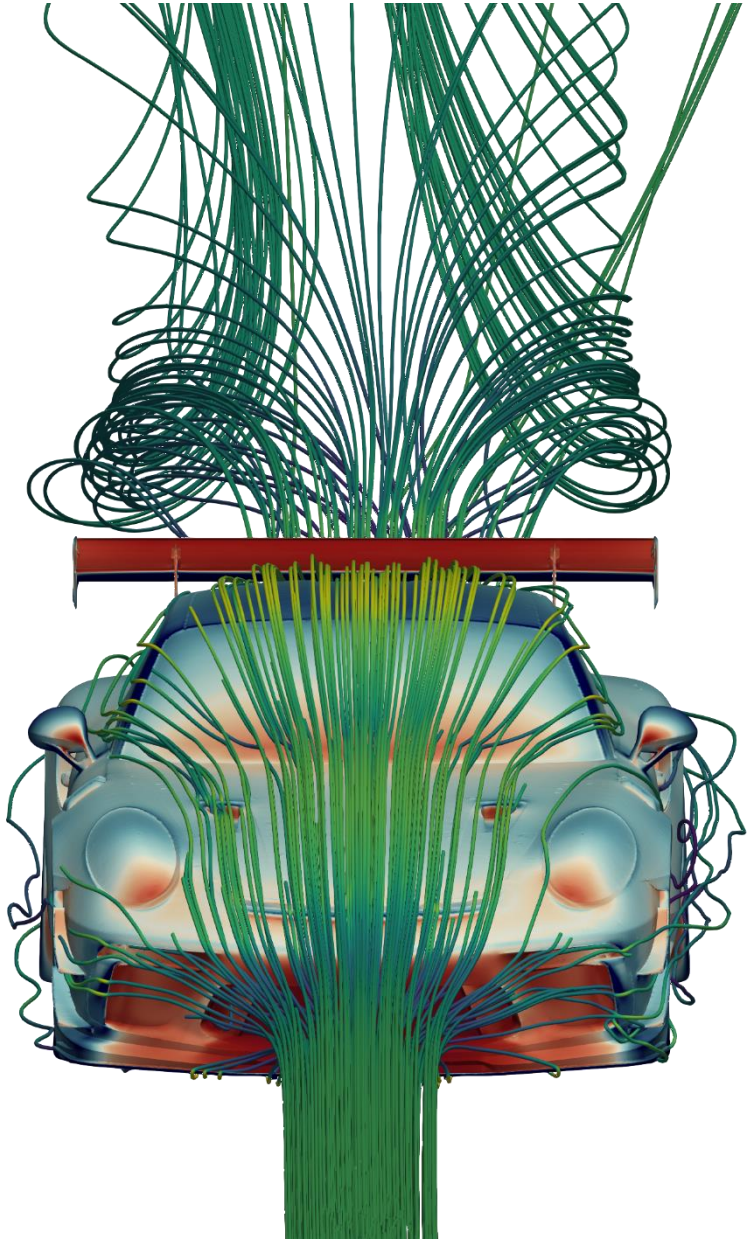

THE REPRODUCTION, DISTRIBUTION, AND UTILIZATION OF THIS REPORT WITHOUT EXPRESS WRITTEN AUTHORIZATION BY VERUS ENGINEERING IS PROHIBITED

DEFINITIONS

1. **Coefficient of Pressure (Cp)** = This is a dimensionless number which describes relative pressure to atmospheric pressure. A Cp of 0 equates to atmospheric pressure while a number below 0 represents low pressure and a number above 0 represents high pressure.
2. **CpX** = This is a dimensionless number which describes Cp normal to the x-direction. This helps us visualize locations which create drag. Red represents locations which are creating drag, while blue represents locations where thrust is created.
3. **CpZ** = This is a dimensionless number which describes Cp normal to the z-direction. This helps us visualize location which create downforce or lift. Red represents locations which are creating lift, while blue represents locations where downforce is created.
4. **Total Pressure Coefficient (CpT)** = This is a dimensionless number which describes total energy of the airstream. It is the sum of static pressure and dynamic pressure.
5. **Wall Shear** = This is a force per unit area due to fluid friction on the wall. This is used to visualize areas of separation and rapid changes on the surface.
6. **LIC Plot** = Line integral convolution (LIC) is used to visualize “oil” flow on the surface. It is a great way to correlate to flow vis testing and to study the flow on the surface of the vehicle.
7. **Streamline** = These are fluid tracers which are used to visualize where the air is going or coming from. These are normally colored as velocity where red is high-velocity and blue is low-velocity.
8. **Points** = One point is considered 0.001 of a coefficient. This is used in coefficient of drag (Cd) and coefficient of lift (Cl).

THE REPRODUCTION, DISTRIBUTION, AND UTILIZATION OF THIS REPORT WITHOUT EXPRESS WRITTEN AUTHORIZATION BY VERUS ENGINEERING IS PROHIBITED